圖示 a.(即先前技術)

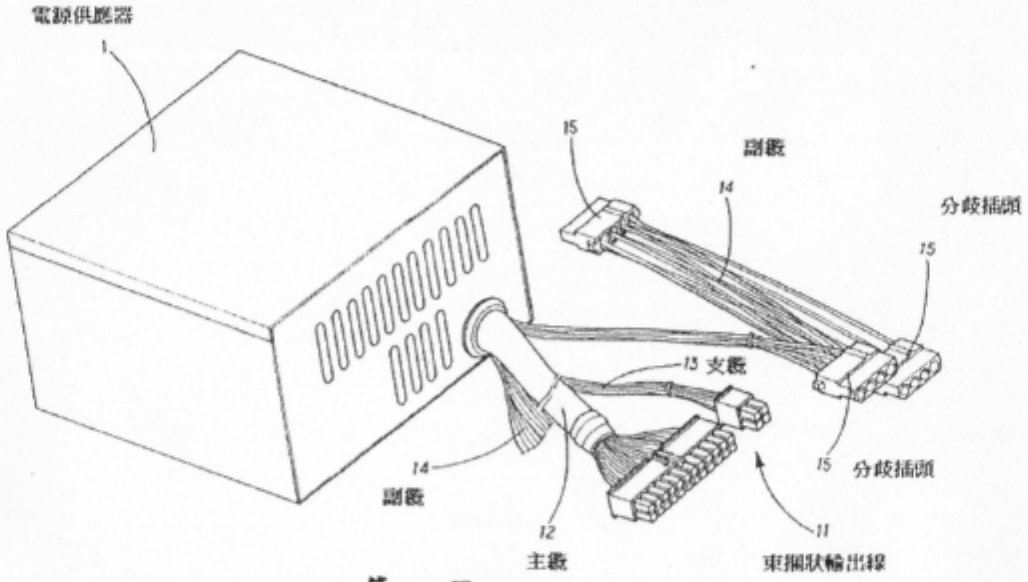


第一圖

圖示 1-1(即系爭專利)

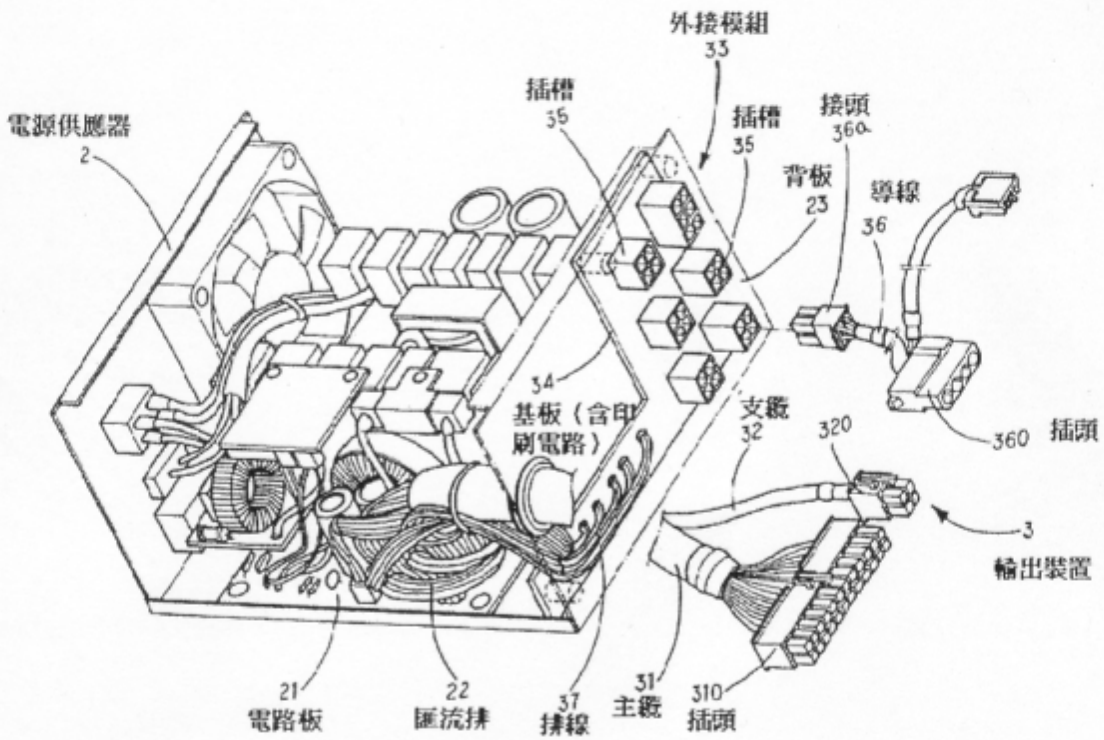


第二圖

1-2

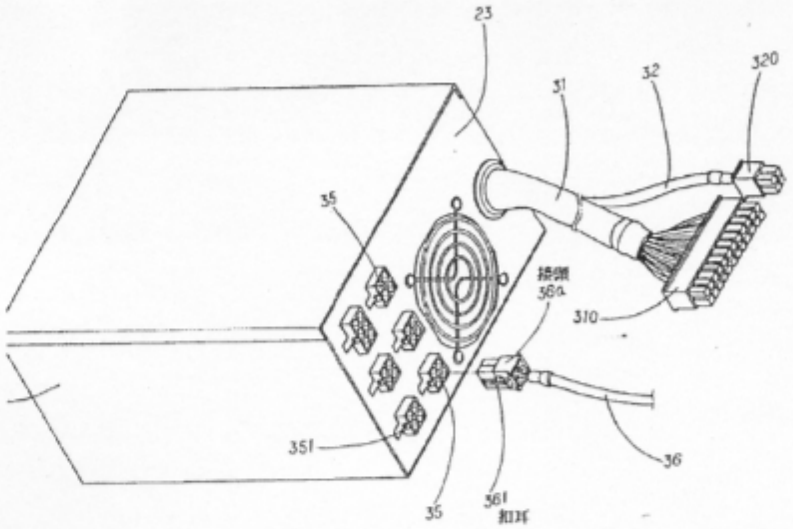
23
31
32
320
35
排線
36a
310
351
36
35
361
扣耳

第三圖

1-3

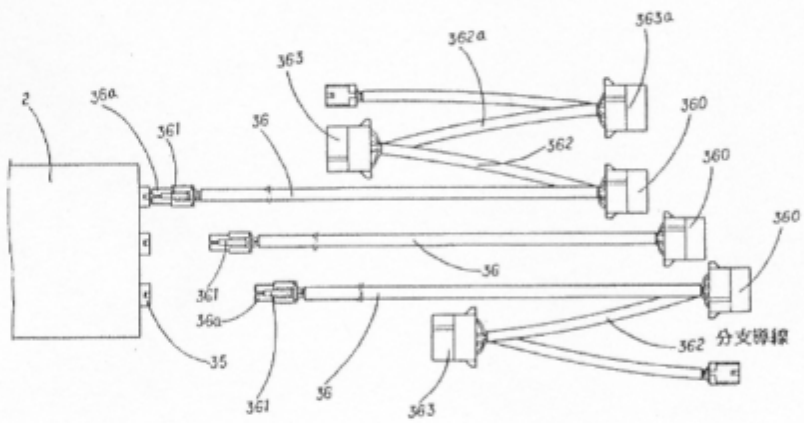
2
36a
361
36
363
362a
363a
360
362
360
360
36
361
36a
35
361
36
363
362
分支導線

第四圖

圖示 2-1(即證據 2，1999 年 3 月 9 日公告之美國第 5880932 號專利案)

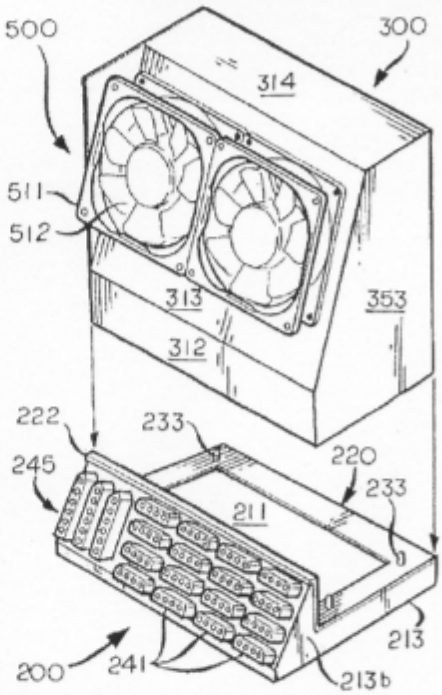


圖示 2-2

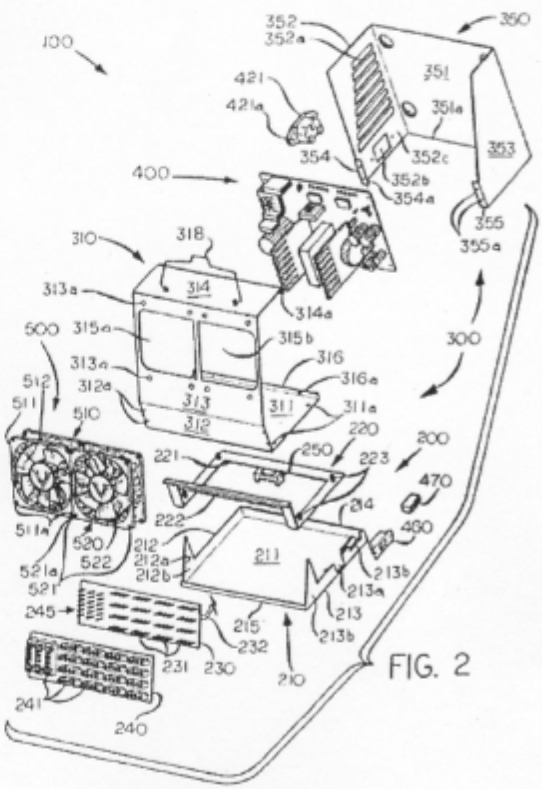

圖示 3-1(即證據 3，UltraProducts"X-connect"500WPowerSupply 的網頁資料)

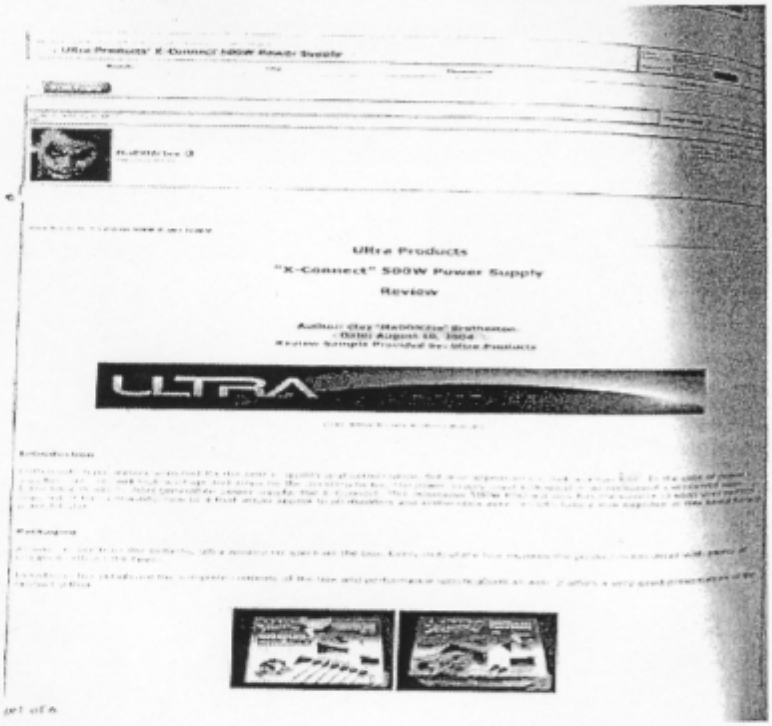
Ultra Products
"X-Connect" 500W Power Supply
Review

圖示 3-2

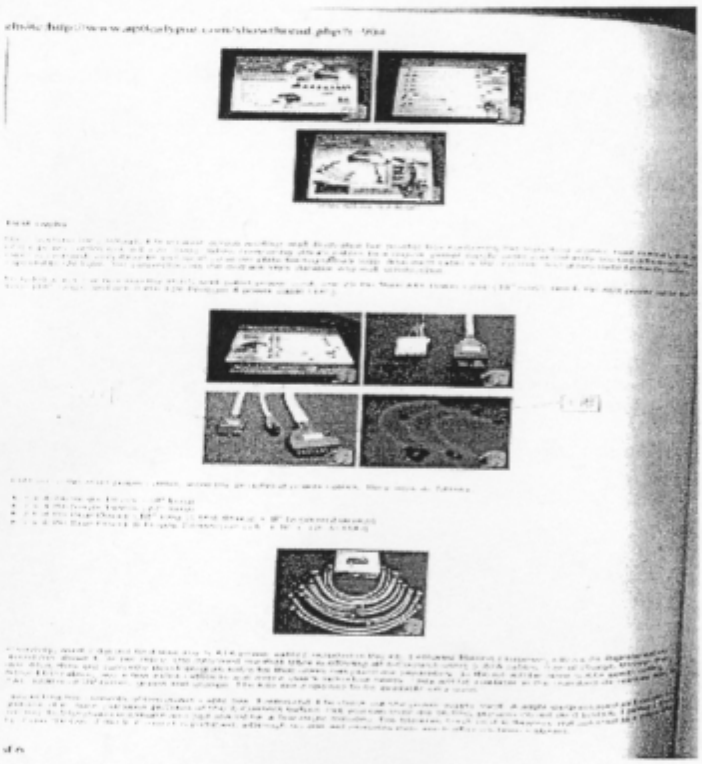

圖示 3-3

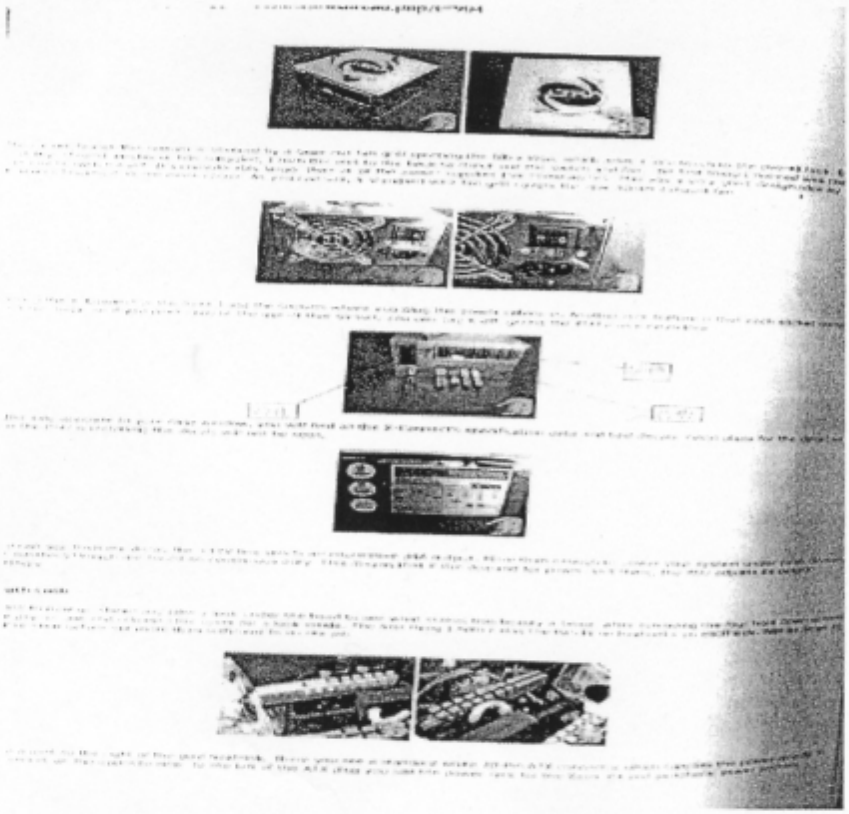

圖示 3-4



圖示 3-5

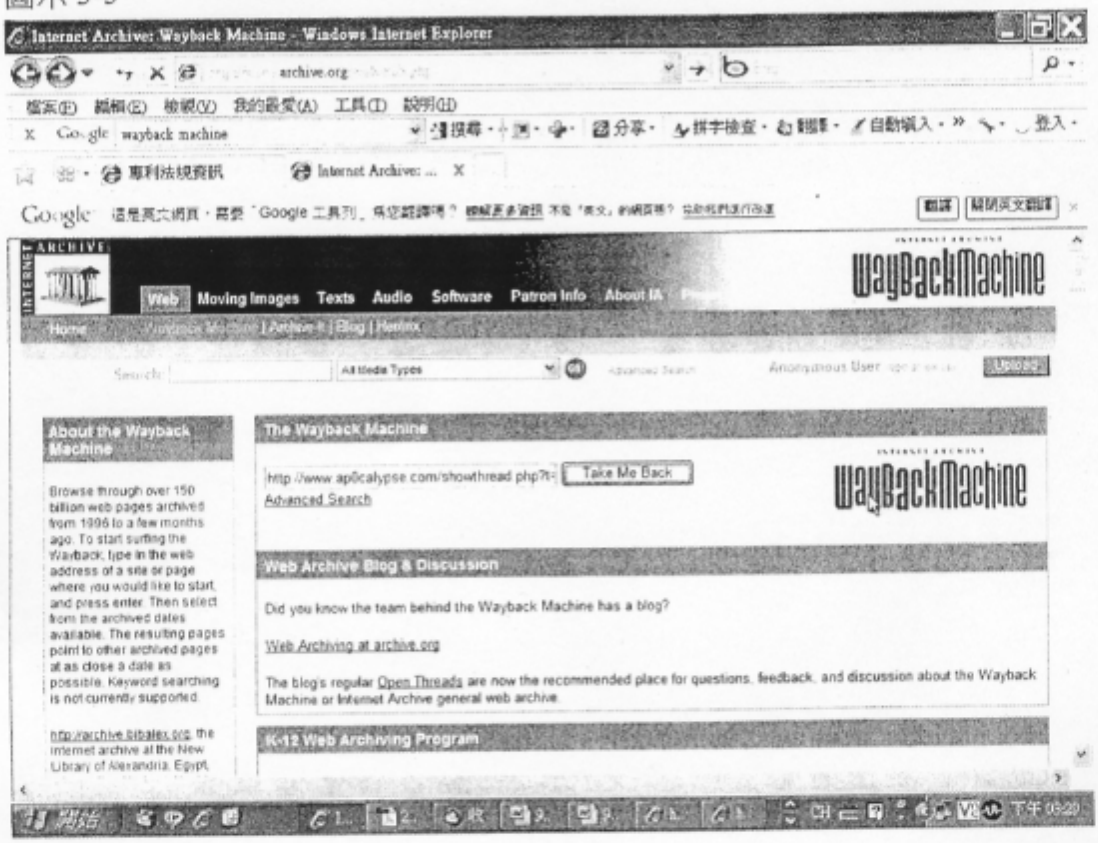
Internet Archive: Wayback Machine - Windows Internet Explorer
archive.org
wayback machine
專利法規資訊
Internet Archive: ...
Google 這是英文網頁，需要「Google 工具列」幫您翻譯嗎？
Web Moving Images Texts Audio Software Patron Info About IA
WaybackMachine
About the Wayback Machine
Browse through over 150 billion web pages archived from 1996 to a few months ago. To start surfing the Wayback, type in the web address of a site or page where you would like to start, and press enter. Then select from the archived dates available. The resulting pages point to other archived pages at as close a date as possible. Keyword searching is not currently supported.
The Wayback Machine
http://www.ap0calypse.com/showthread.php?t=
Take Me Back
Advanced Search
Web Archive Blog & Discussion
Did you know the team behind the Wayback Machine has a blog?
Web Archiving at archive.org
The blog's regular Open Threads are now the recommended place for questions, feedback, and discussion about the Wayback Machine or Internet Archive general web archive.
K-12 Web Archiving Program

圖示 3-6

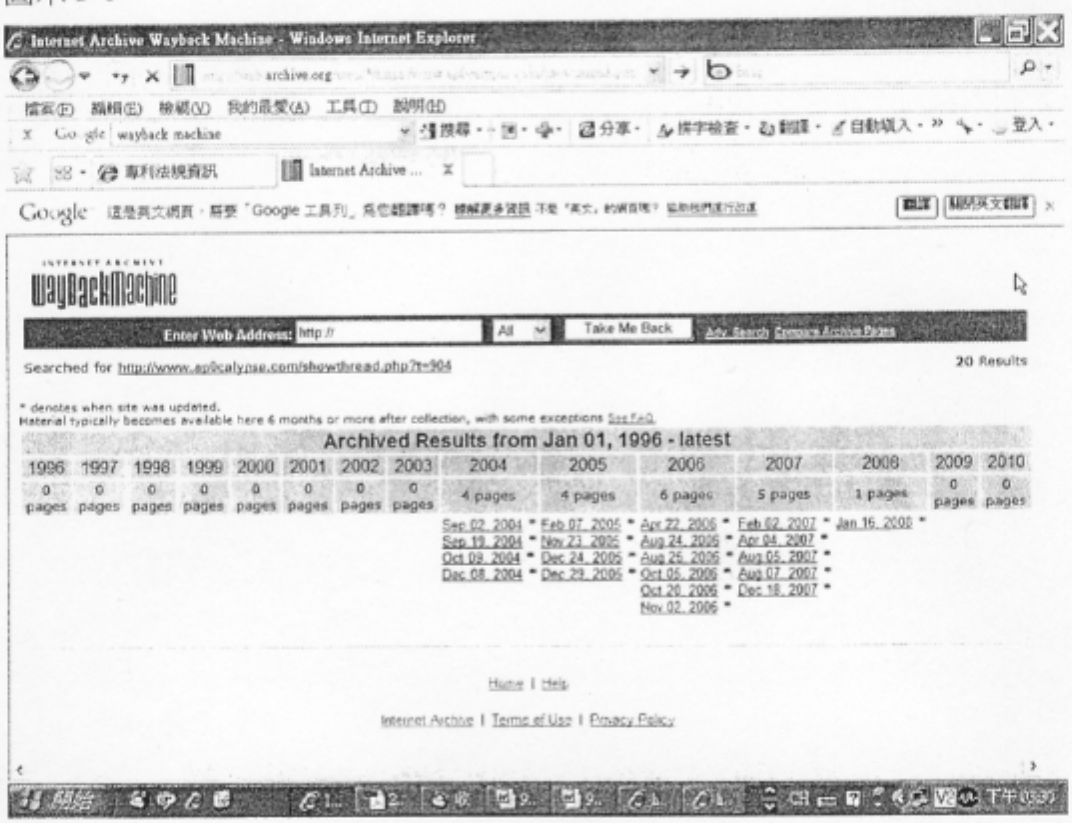
Internet Archive Wayback Machine - Windows Internet Explorer
archive.org
wayback machine
Internet Archive ...
Google 這是英文網頁，需要「Google 工具列」幫您翻譯嗎？
WaybackMachine
Enter Web Address: http://
All
Take Me Back
Adv. Search Compare Archive Pages
Searched for http://www.ap0calypse.com/showthread.php?t=904
20 Results
* denotes when site was updated.
Material typically becomes available here 6 months or more after collection, with some exceptions See FAQ
Archived Results from Jan 01, 1996 - latest
1996 1997 1998 1999 2000 2001 2002 2003 2004 2005 2006 2007 2008 2009 2010
0 pages 0 pages 0 pages 0 pages 0 pages 0 pages 0 pages 0 pages 4 pages 4 pages 6 pages 5 pages 1 pages 0 pages 0 pages
Sep 02, 2004 * Sep 19, 2004 * Oct 09, 2004 * Dec 08, 2004 *
Feb 07, 2005 * Nov 23, 2005 * Dec 24, 2005 * Dec 29, 2005 *
Apr 22, 2006 * Aug 24, 2006 * Aug 25, 2006 * Oct 05, 2006 * Oct 20, 2006 * Nov 02, 2006 *
Feb 02, 2007 * Apr 04, 2007 * Aug 05, 2007 * Aug 07, 2007 * Dec 18, 2007 *
Jan 16, 2008 *
Home | Help
Internet Archive | Terms of Use | Privacy Policy

圖示 3-7

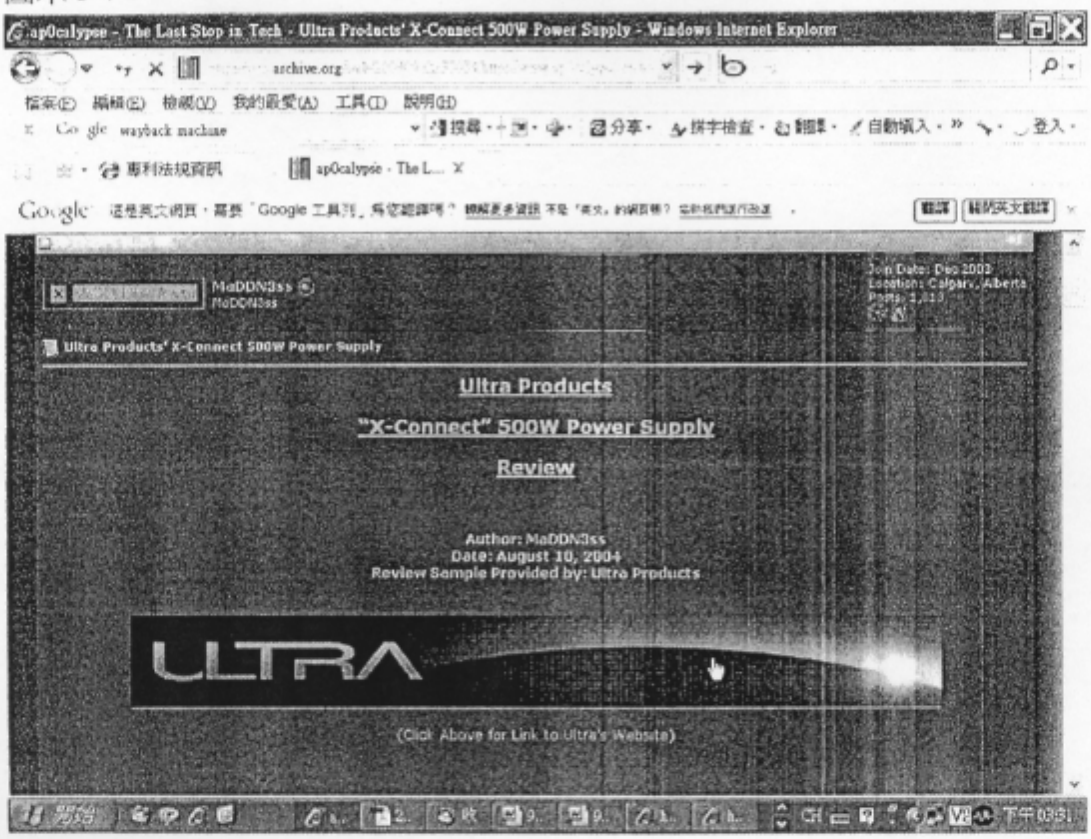
ap0calypse - The Last Stop in Tech - Ultra Products' X-Connect 500W Power Supply - Windows Internet Explorer
archive.org
wayback machine
MaDDN3ss
Ultra Products' X-Connect 500W Power Supply
Ultra Products
"X-Connect" 500W Power Supply
Review
Author: MaDDN3ss
Date: August 10, 2004
Review Sample Provided by: Ultra Products
ULTRA
(Click Above for Link to Ultra's Website)

圖示 3-8

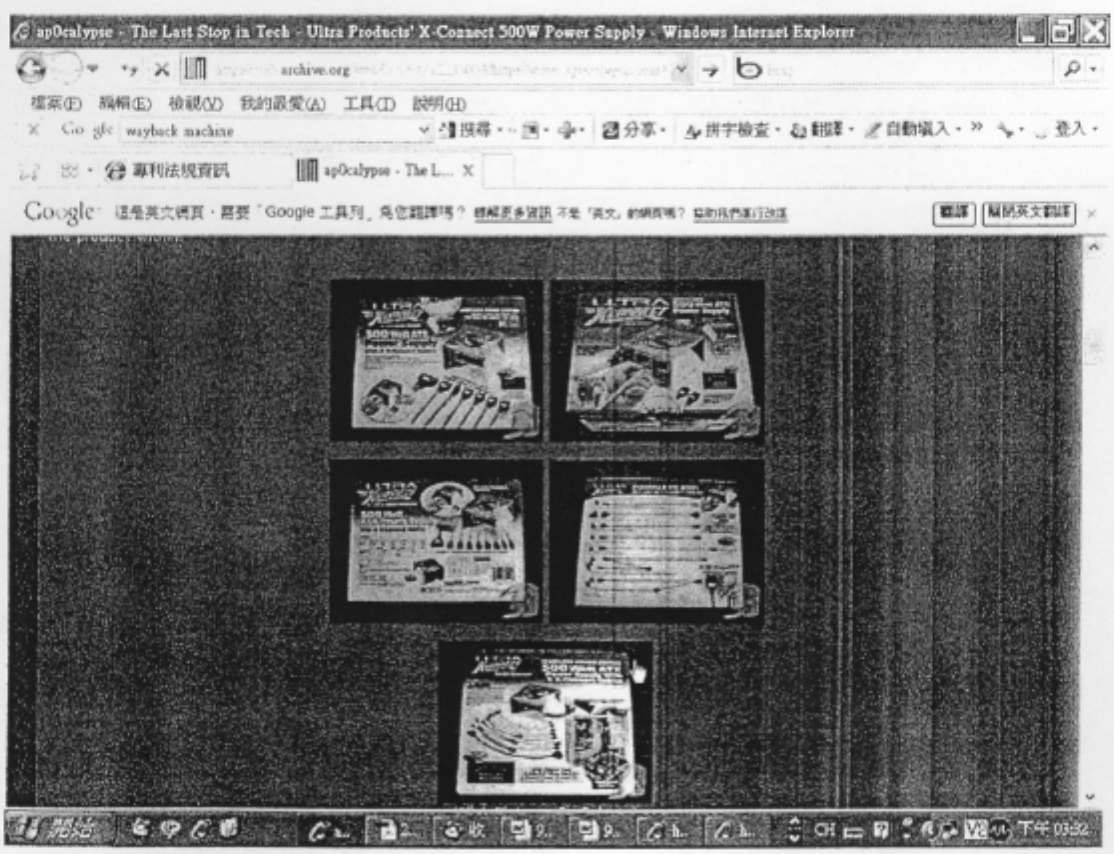
ap0calypse - The Last Stop in Tech - Ultra Products' X-Connect 500W Power Supply - Windows Internet Explorer
archive.org
wayback machine